GW1AN-LV1SFN32

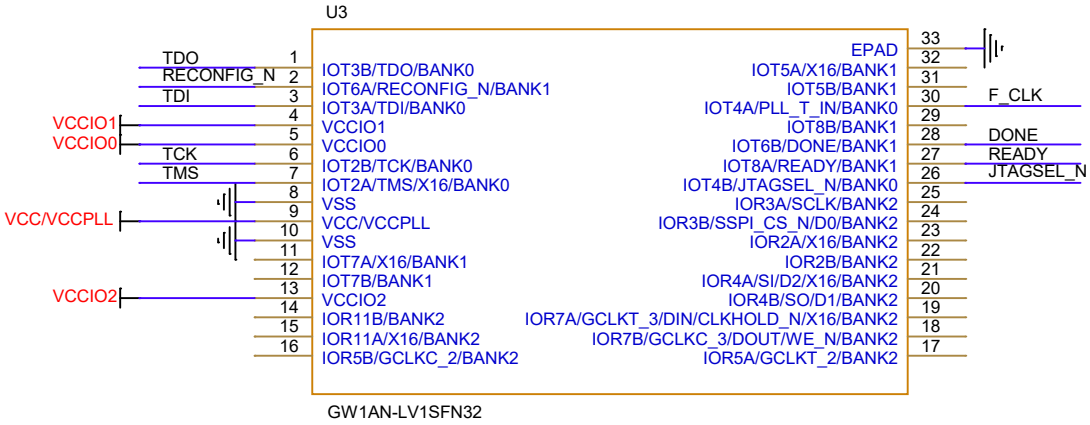

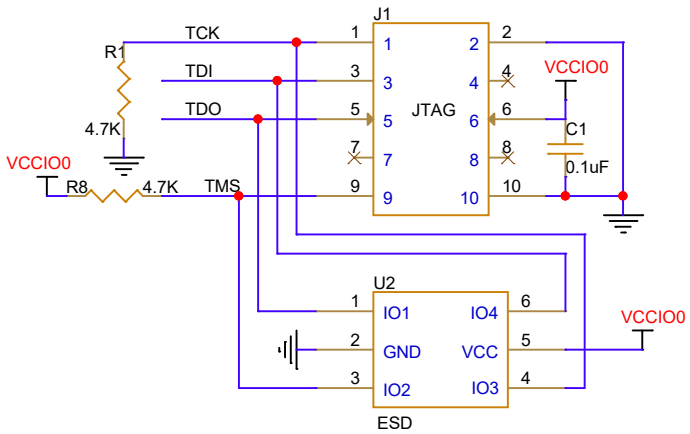

*JTAG download section

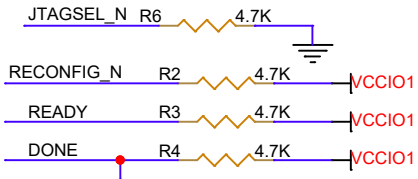

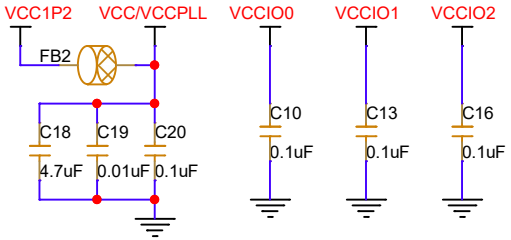

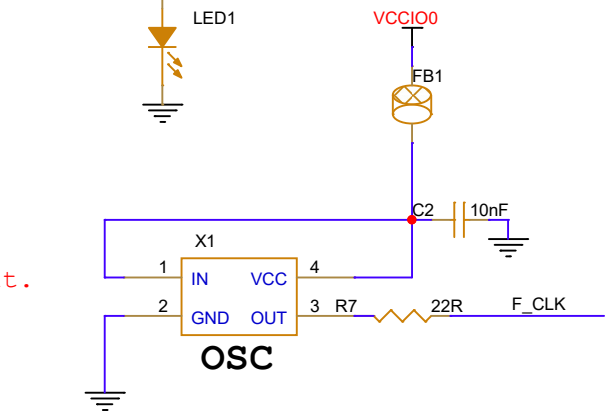

Notes:
1、It is recommended that add an ESD protection chip to the JTAG download circuit.

Title	GOWIN Minimum System SCH	
Size A4	Document Number GW1AN-LV1SFN32	Rev 1.0
Date: Friday, March 06, 2026	Sheet 1 of 8	